RD30 Dimensional Drawings
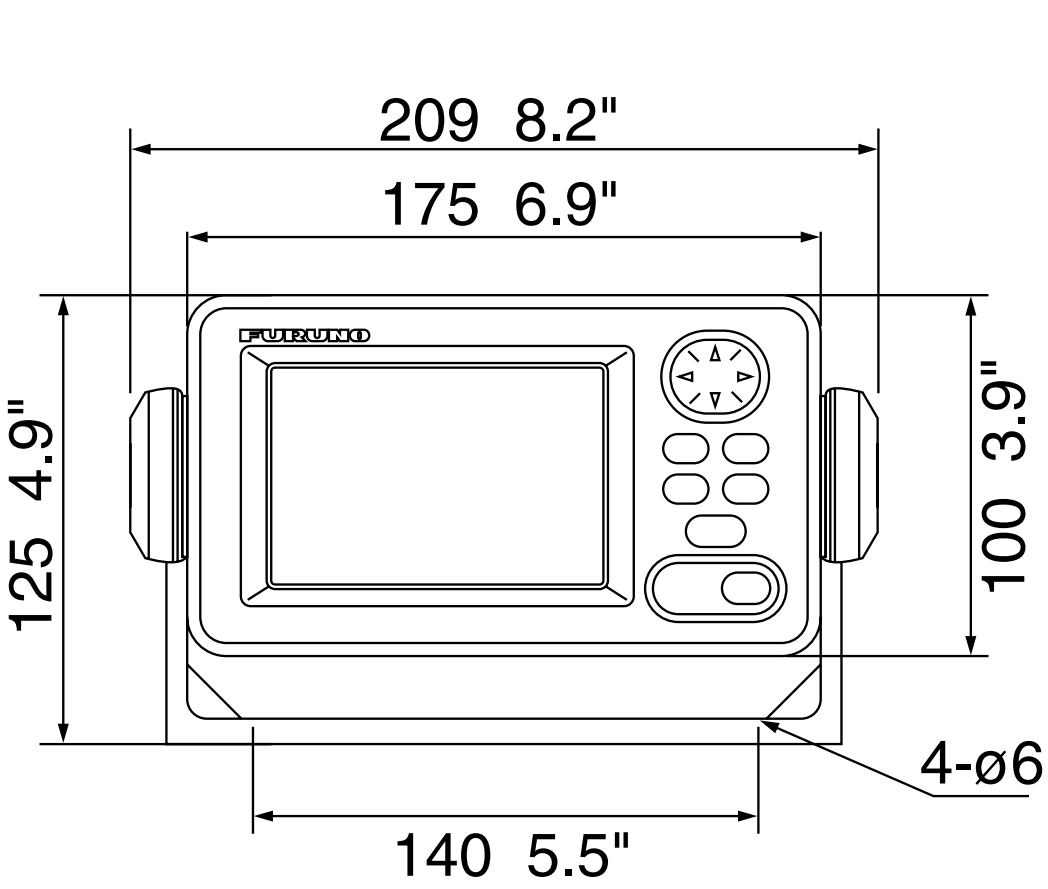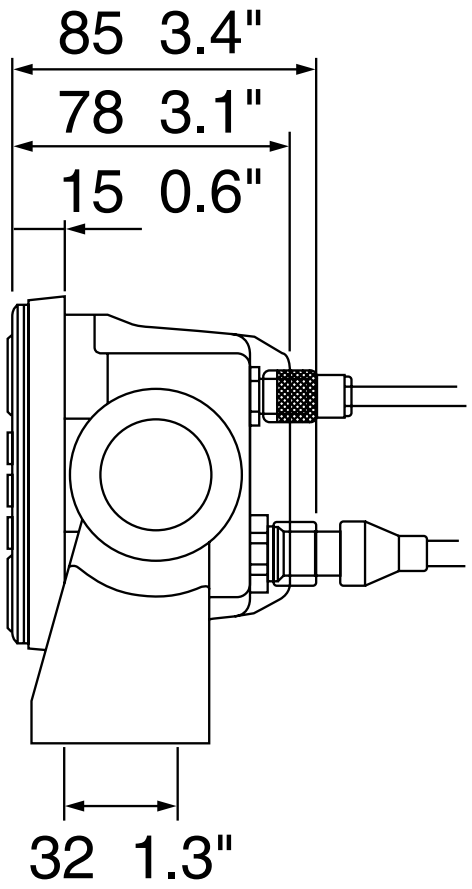
RD30 Display Unit 0.68 kg 1.5 lb